2300 23rd Avenue, Rockford, IL 61104 | P: 815-226-3000 | Sales@DixonAutomatic.Com

Dixon Automatic Tool

100 Series Screwdriver Head
SD-127 Extended Throat/Vibratory Bowl

Product Specifications

Piece Part Information	
Shank Diameter	#2 – .75 in. Screw
Shank Lengths	Max 4 in. (102mm)
Head Diameters	Max 2.5 in. (63.5mm) Hex Nuts .68 in. (17mm)
Disc Shaped Parts	Max 2.5 in. dia. (64mm)
Feed System Information	
Feed System	Vibratory Feeder Bowl
Bowl Size	6-36 in. (153-914mm)
Track	Vibratory Inline/Extended Throat
Escapement	Transfer Escapement
Contains all options from base head	
100 Series Screw/Nut Driving Head	

Fully automatic and equipped with column structure to provide an extended throat reach for the driving head. The vibratory bowl feeder varies in size to suit the fasteners being fed. A horizontal vibratory feed track feeds the fasteners to a transfer escapement that places each fastener into the screwdriver head's placement jaws. The placement jaws hold the fastener's threads in position until the fastener is engaged in the workpiece. The screwdriver head has built-in sensing to confirm proper insertion of each fastener into the workpiece. The baseplate size is determined by the size of the bowl feeder system. This model is ideally suited for an automated assembly systems.

Vibratory Inline Track

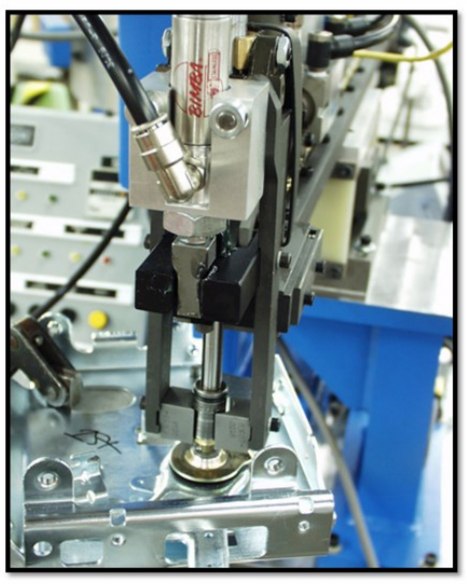

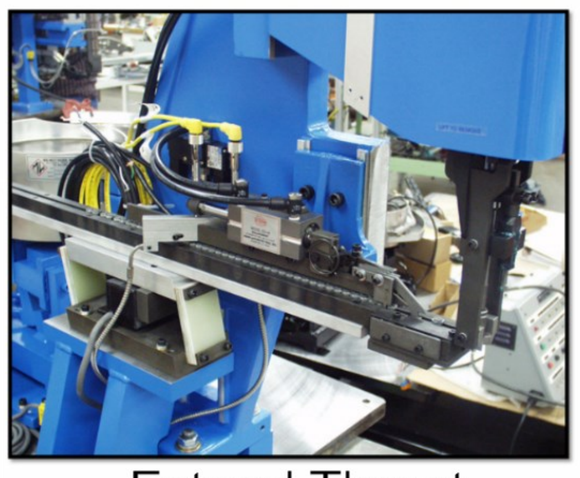

Extend Throat for applications where space is needed under jaws.

www.dixonautomatic.com

2300 23rd Avenue, Rockford, IL 61104 | P: 815-226-3000 | Sales@DixonAutomatic.Com

Dixon Automatic Tool

100 Series Screwdriver Head

SD-100 Series Screw/Nut Driving Head – Standard features include a pneumatic motor with driving or reversible rotations, and selected for a range of speeds and torque capacities. Optional D.C. and servo motors are available. Pneumatic control valve with DIN connectors. Control switches also provide for the driving head to return and other auxiliary functions as may be required. The basic driving function starts the driving spindle to advance together until the fastener, held in the placement jaws, spindle and placement jaws advance together until the fastener engages the workpiece. The placement jaws are then forced opened by a cam as the driving spindle completes the fastener's insertion. Note: When vacuum is employed, the placement jaws are opened before the fastener is driven into the workpiece.

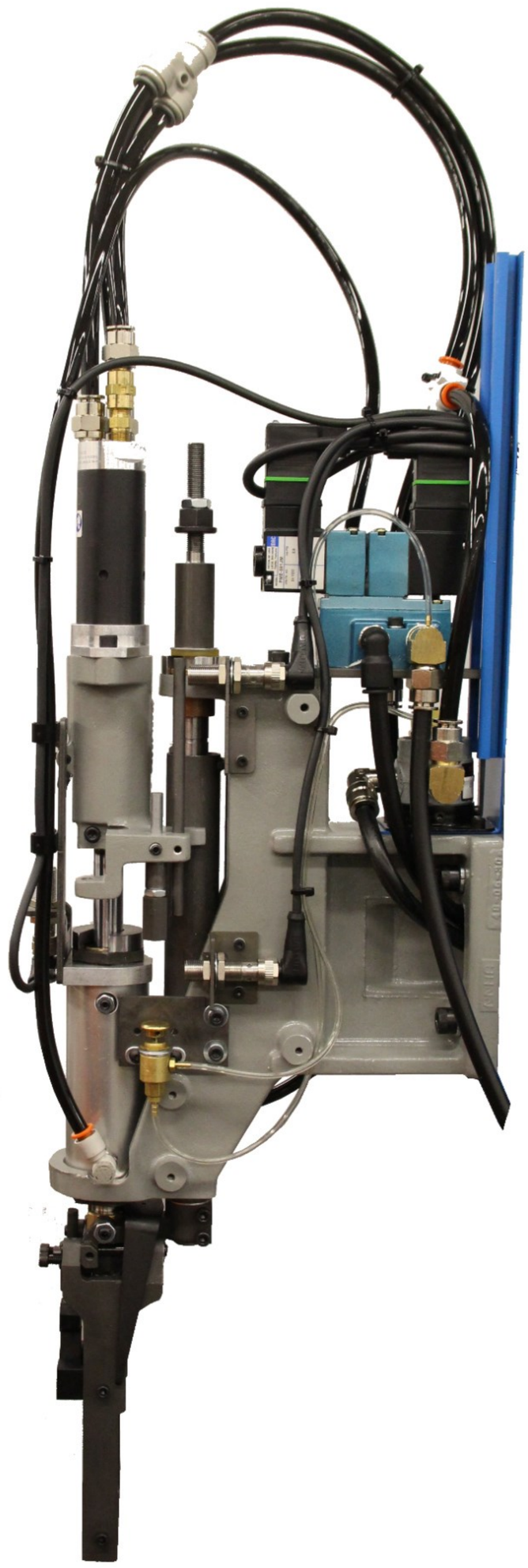

Dimensional Data

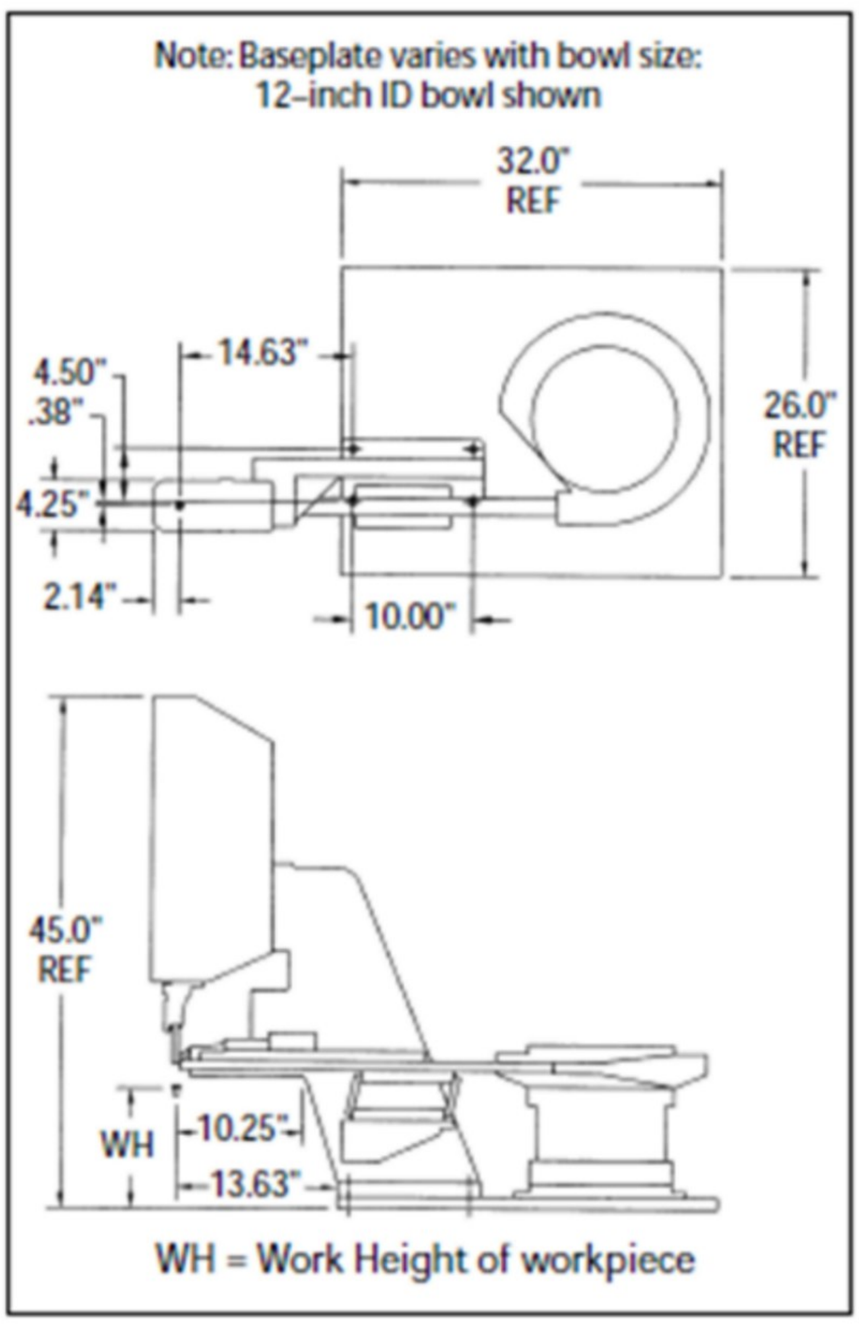

Standard 100 Series Head Components	
Head Stroke	2 in., 3 in., 4 in., 5 in. (50.8 mm, 76.2mm, 101.6mm, 127mm)
Torque	4-120 in.-lbs (.5-13.5Nm) STD. Up to 180 Optional
MC-9 Control-Pac	Four-way Pneumatic Valve (24 VDC)
Proximity Switches	24 VDC PNP Standard Others Optional
Valves	24 VDC Low Watt Coils Standard Others Optional
Depth Settings	Plus Minus 2 Standard +/- 1/2 Optional
Drive to Depth	Yes
Air Supply (PSI)	90 (6.3 Bar)
100 Series Motor Components	
Pneumatic	
Clutches	
	2-20 in.-lbs (.23 to 2.8 N-m)
	15-35 in.-lbs (1.7 to 3.9 N-m)
	25-50 in.-lbs (2.8 to 5.6 N-m)
	40 in.-lbs and above commercial air motor and clutch required, most manufactures supported.
Pneumatic	250 to 3000 RPM
DC Motor	
DC Electric	Transducer Torque Control or Torque/Angle Control All Brands
Torque	4-180 in.-lbs (.5-20.34Nm)
Servo Motor	
Current Sensing Torque Control	Servo Motor
Torque	4-180 in.-lbs (.5-20.34Nm)